111P

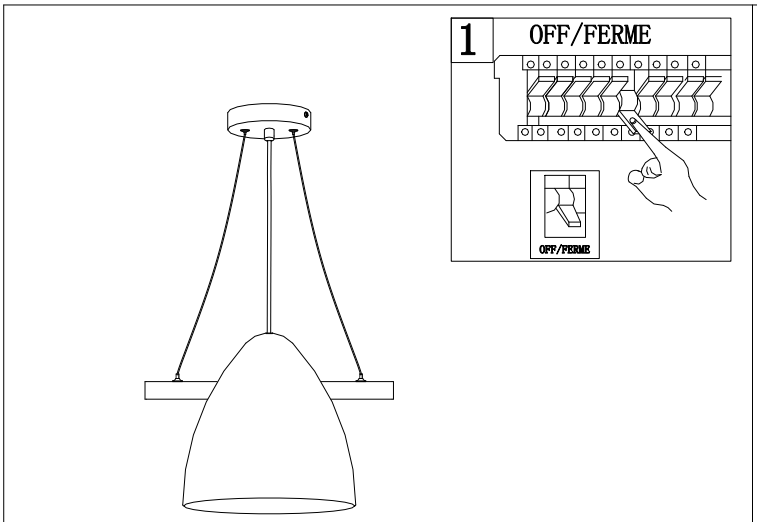

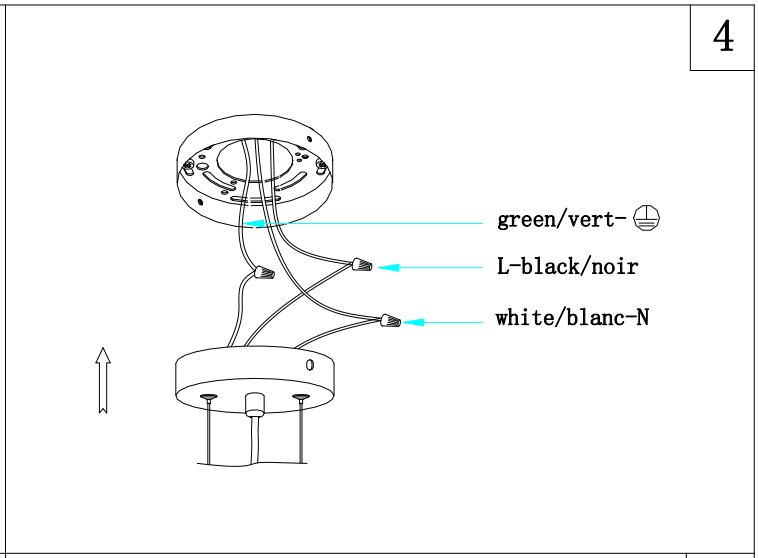

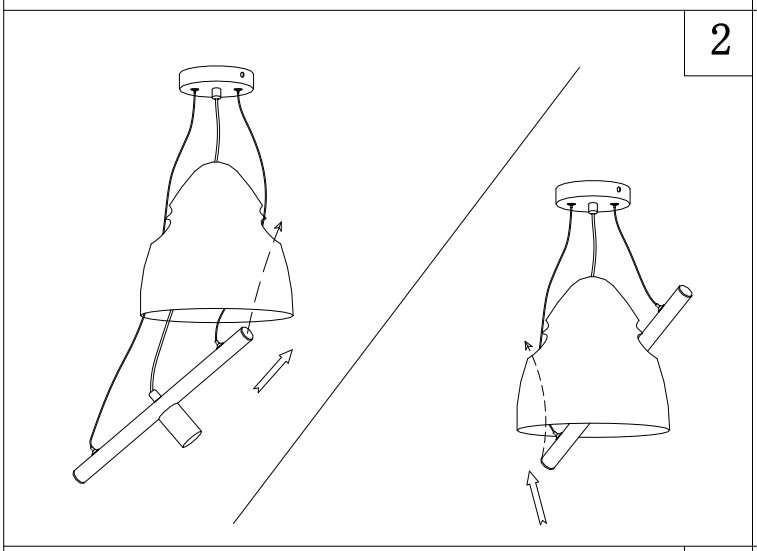

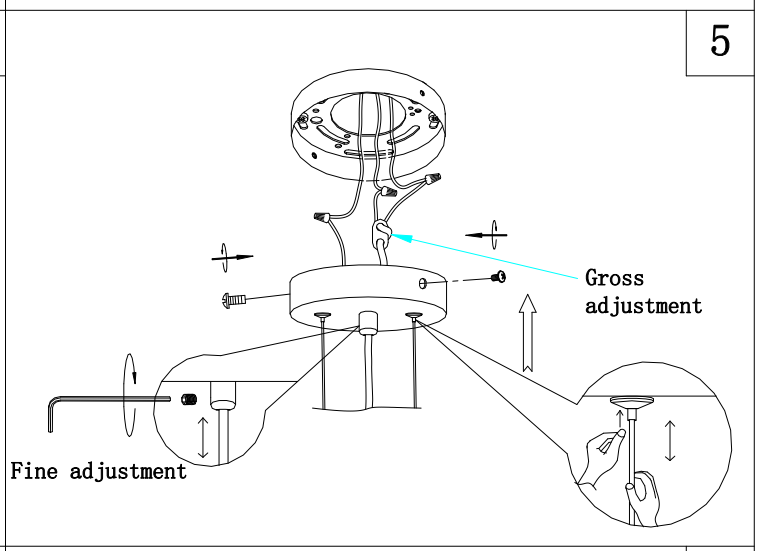

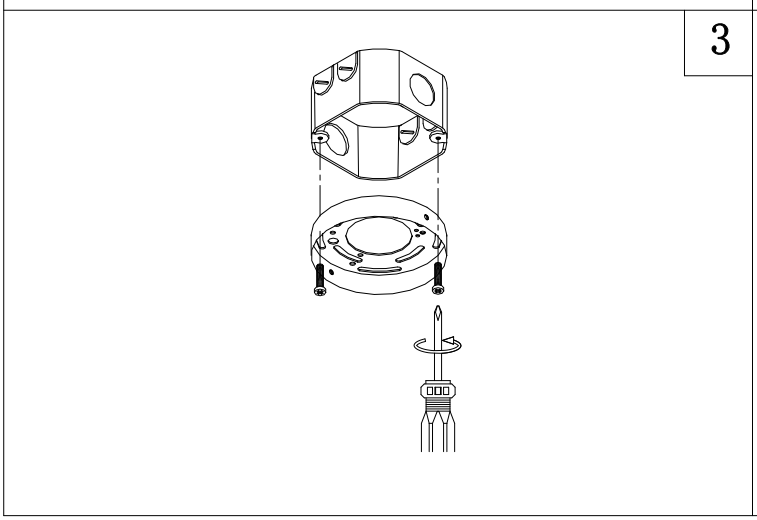

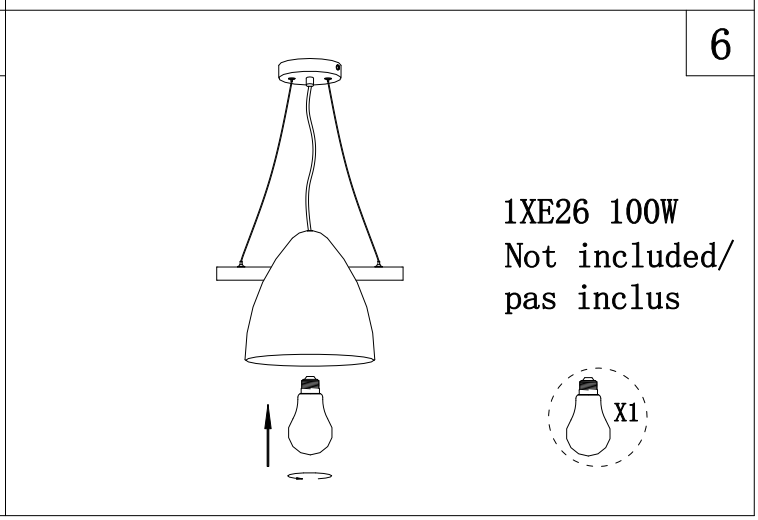

1401 Courtneypark Dr.E Mississauga,Ontario,CanaDa L5T 2E4
Tel.(905)564-1262 Fax.(905)564-1299
E-mail:dainolite@dainolite.ca Web:www.dainolite.ca

Apr 8,2016