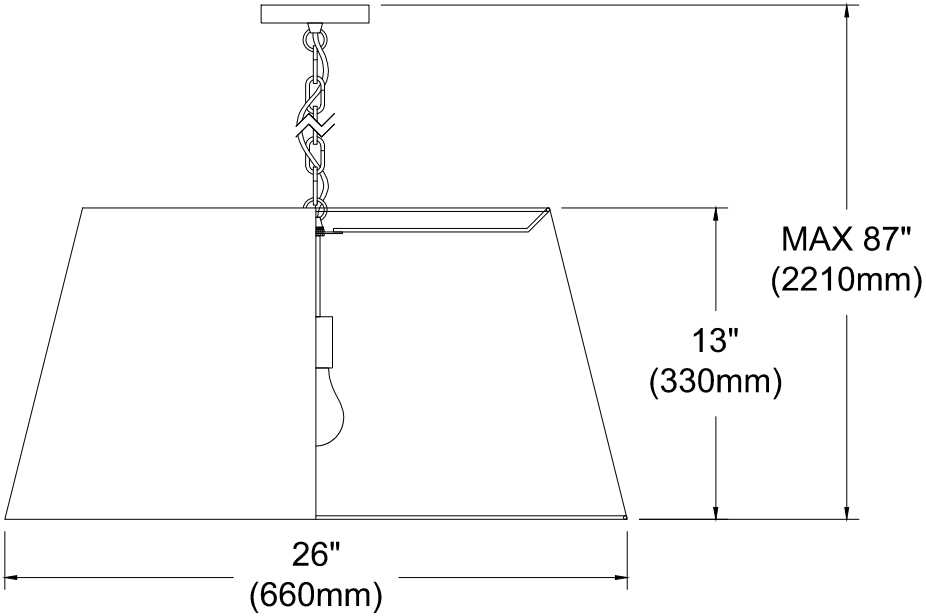MIL-L